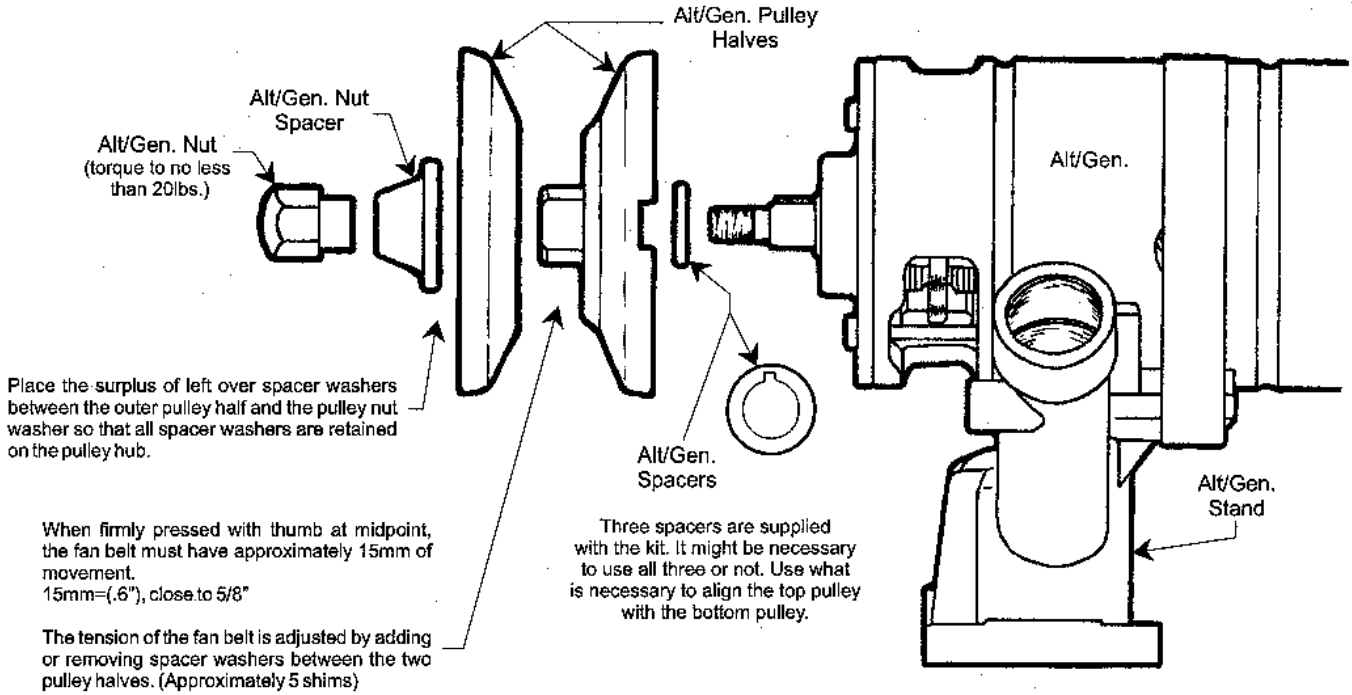

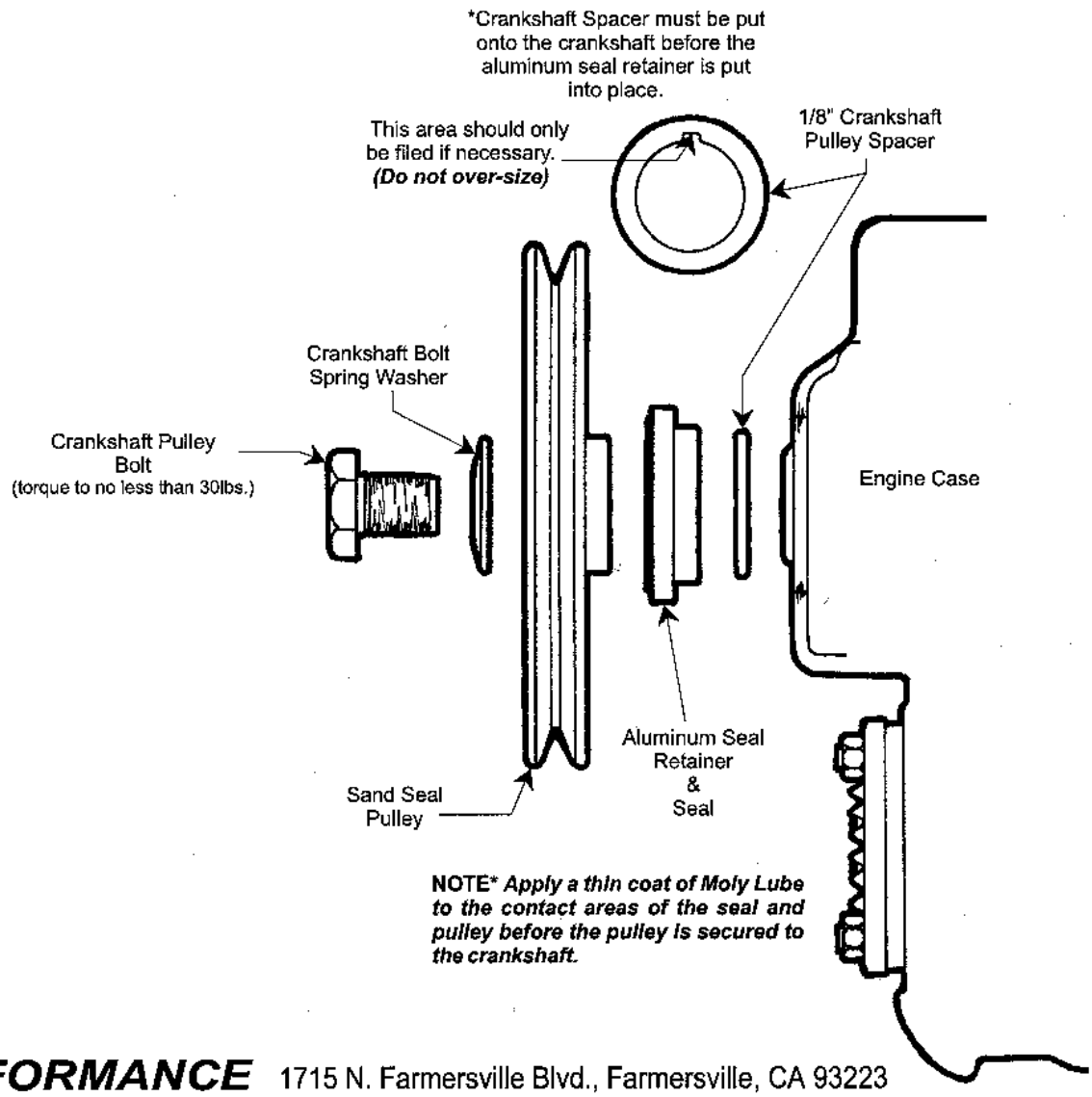

CB PERFORMANCE 1715 N. Farmersville Blvd., Farmersville, CA 93223